AS-IS System View (SV-2)

- Existing and Near-term (2009-2010)
Telecommunications Infrastructure

Presented by ATO-W - Telecommunications Services Group (TSG)

Presented to: NAS Enterprise Architecture Conference

Date: June 24, 2009

SV-2 Systems Communication Description

- **Purpose**: The AS-IS SV-2 view of the NAS describes how NAS interfaces, as identified in the NAS SV-1, are supported by physical media
  - Description of how NAS SV-1 interfaces are implemented
  - “Simplified NAS Architecture” is the AS-IS SV-1
- **Definition**: AS-IS SV-2 depicts pertinent information about communications systems, communications links, and communications networks. Presented as:
  - Pictorial view of system interactions
  - Telecommunications service characteristics along with implementation technologies

Terminology: Communication Description

- **Telecommunications Infrastructure**: Transmission resources used to move information between ground Service Delivery Points (SDPs)
  - Transmission backbone, including:
    - Existing transport services: e.g. FTI infrastructure, FOMS, and FAA satellite relays
    - Evolving FTI optical backbone is the key near-term segment
  - Transmission access services (Remote SDP-to-backbone)
    - Dedicated Transmission Services (DTS)
    - Remote SDP-to-backbone Networked Services
- **RF Infrastructure:** Air/Ground services via RF communication outlets in areas of: surveillance; air/ground voice; air/ground data; navigation; and weather

Near-Term Telecommunications Backbone

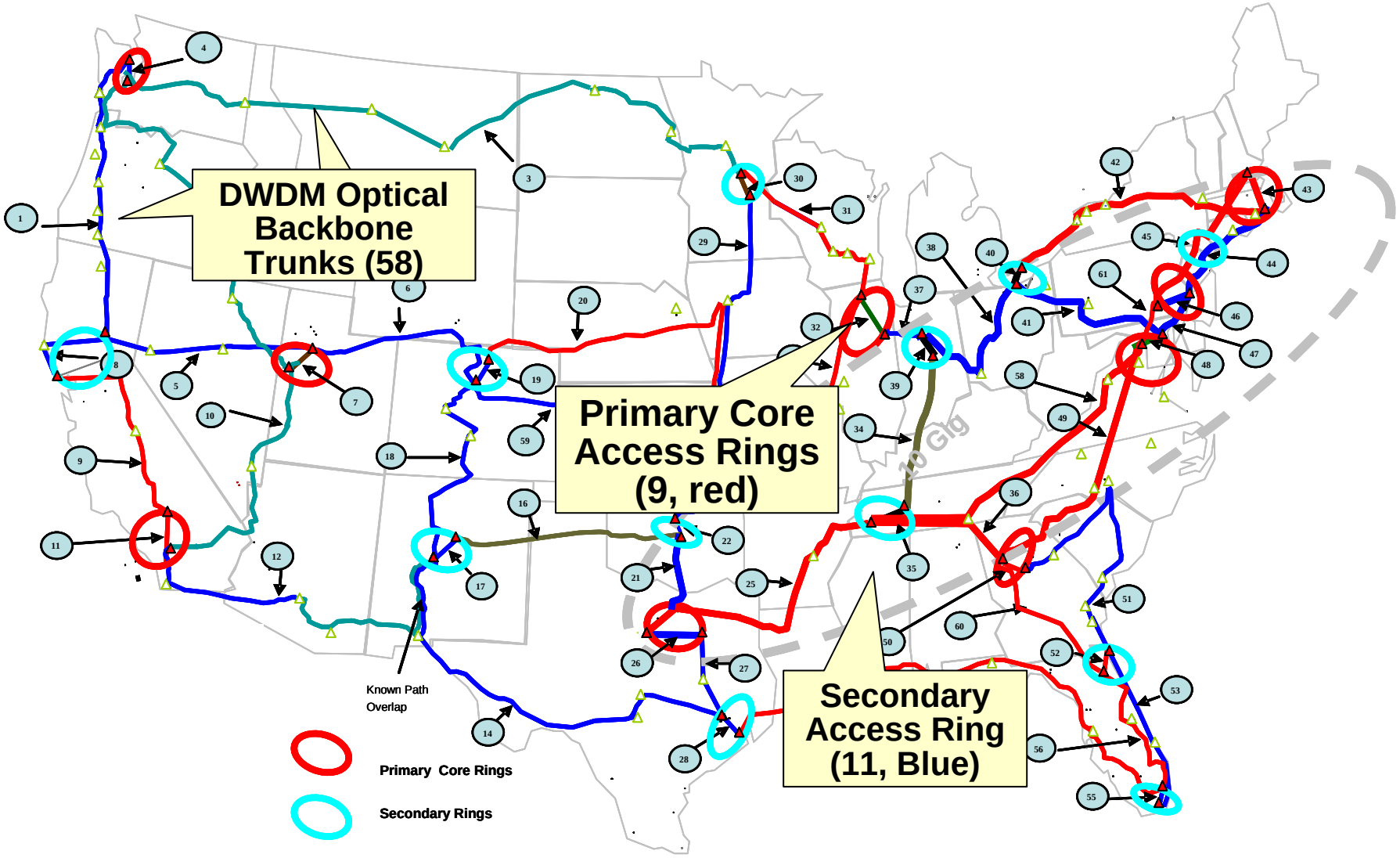

Telecommunications Backbone (Con't)

- Dense Wavelength Division Multiplexing (DWDM) links include a combination 2.5 Gbps (OC-48) and 10 Gbps (OC-192) circuits
  - 58 DWDM wavelengths interconnect at new collocation (CoLo) facilities
- Nine metropolitan rings provide access for key FAA facilities
  - Provide connectivity to existing carrier POP locations
- Definition of On-Net facility:
  - Access to a metropolitan ring or other direct optical connectivity to collocation facilities, i.e. backbone exclusively accessed via CoLo's
  - 50 msec latency is available for critical NAS Ops IP services
- Major FAA Off-Net facilities will be connected to the backbone (transitioned to On-Net facilities) by either:
  - Multiple direct OC-3s to existing CoLo's
  - Eleven additional metropolitan access rings (shown in blue) are anticipated for future backbone expansion

Telecommunications Infrastructure Expansion

- Backbone expansion and site access driven by service needs
  - Additional CoLo's with new direct access rings
  - Fiber access connections to existing CoLo's
- Facility expansion needs (such as a NextGen Facilities) will be assessed as to most appropriate connectivity approach
- Telecommunications infrastructure also provides underlying connectivity and transport for other NAS programs and concepts
  - Boundary Protection services of NAS Enterprise Security Architecture
  - System Wide Information Management (SWIM)
  - Integration of SOA infrastructure and security architecture to support service flows between NAS and external user/systems

SV-2 View and Material for AS-IS Architecture

- **Six AS-IS SV-2 views were developed**
  - Overall telecommunications infrastructure
  - View for five information flow areas
    - Surveillance
    - Weather
    - Command and Control
    - Flight Data
    - Aeronautical
- **Each view includes**
  - Overview chart depicting key service associations
  - Service summaries categorized by services per system area
  - Specific service “Needline” examples

NAS Telecommunications Infrastructure: 2009-2010

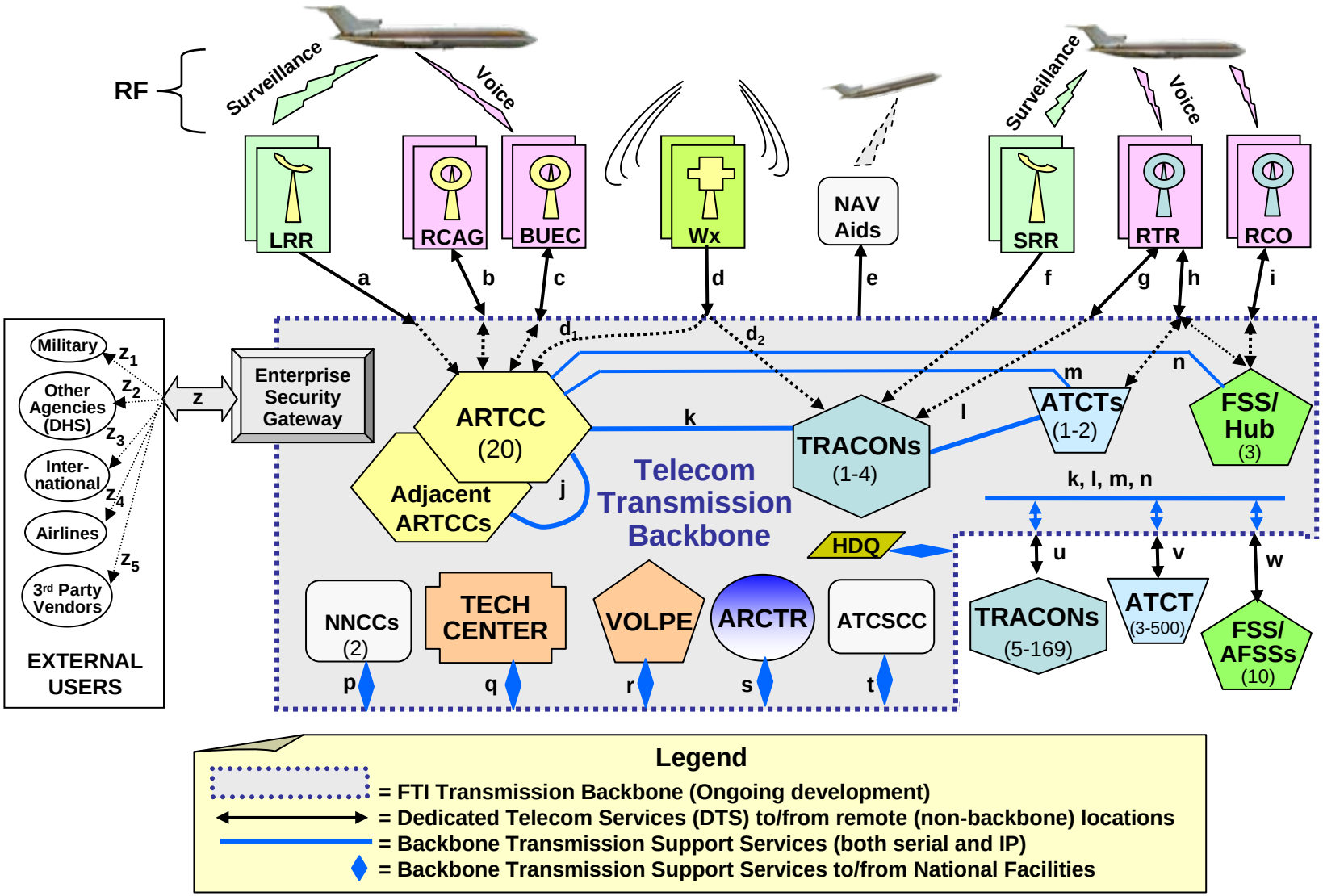

NAS Telecommunications Service Summary

Service Type	Service Count**	Bandwidth**
DTS	21939	2,688,250 kbps
Ops IP	1455	1,367,856 kbps
Total	23,394	4,056,106 kbps

** Does not include all infrastructure services (trunks) and bandwidth associated with legacy transmission systems and networks (such as RCL, LDRCL and NADIN PSN) if those resources are not carrying user traffic. Values do include service(s) and bandwidth for legacy systems that are used to support end-to-end NAS system interactions.

NAS Telecommunications Service Summary

- Per Mission Area

Mission Area	Service Type	Service Count	Bandwidth (kbps)
Surveillance	DTS	1,999	60,624
Surveillance	Ops IP	180	140,080
Surveillance	Total	2,179	200,704
Weather	DTS	1,601	148,952
Weather	Ops IP	299	101,632
Weather	Total	1,900	250,584
Command and Control	DTS	12,654	1,153,354
Command and Control	Ops IP	606	943,488
Command and Control	Total	13,260	2,096,842
Flight Data	DTS	701	5,334
Flight Data	Ops IP	183	112,256
Flight Data	Total	884	117,590
Aeronautical Information	DTS	4,276	1,005,571
Aeronautical Information	Ops IP	187	70,400
Aeronautical Information	Total	4,463	1,075,971
Total		23,394	4,056,106

Sample Data Flow Material - Surveillance

- Surveillance Graphical View
- Surveillance Telecommunications Summary
  - Key System Interactions
  - Service Type
  - Service Count
  - Bandwidth Summary
- Surveillance – Detailed View
  - Implementation Detail
  - System Interactions
    - Source/Sink associations
    - Technology utilized
    - Quantity

SV-2 Surveillance View: 2009-2010*

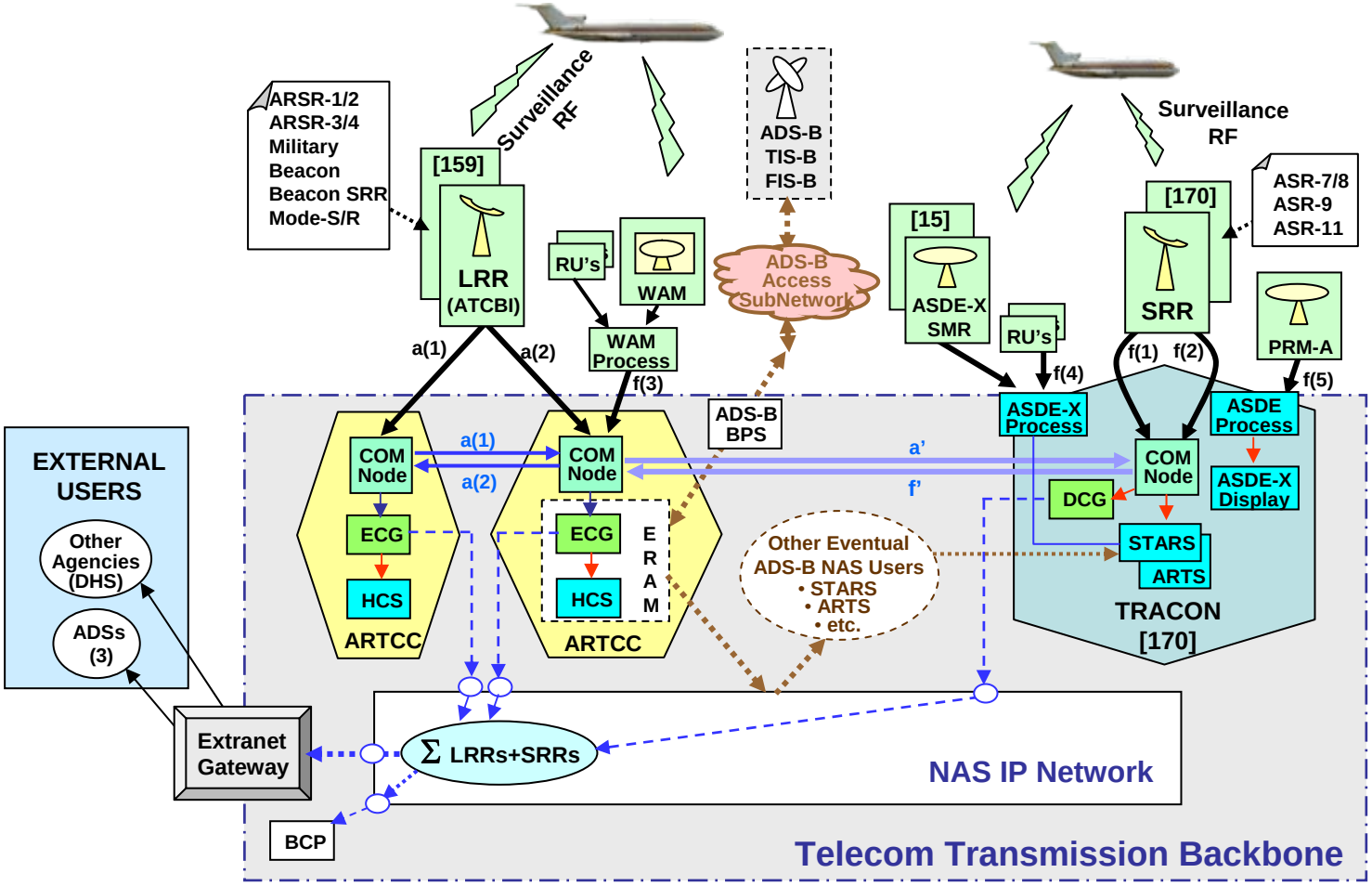

Legend

- ← = Dedicated Telecommunication Service (DTS)
- ←- - = Dashed line represents a data flow within the IP or NADIN Network
- (a) = Connector symbol - look for other symbol(s) with the same letter
- ○ = NAS Ops IP Interface
- □ = NADIN II Interface

* Represents "Surveillance" view as developed from existing telecommunications services. Other LAN or system specific interfaces may exist that do no use telecommunications services.

NAS Telecommunications Summary - Surveillance

Programs/Projects	Service Type	Service Count	Bandwidth
LRR	DTS	1,105	4,591
LRR	Ops IP	18	62,128
ECG	Ops IP	40 (20 x 2)	6,784
ECG	DTS	N/A	N/A
SRR	DTS	639	43,586
SRR-mc	Ops IP	32	2,560
ASDE-X	DTS	170	9,909
ASDE-X	Ops IP	90	68,608
STARS	DTS	56	767
LRR-STARS	DTS	23	1,472
Others	DTS	6	298
Total		2179	200,704

2009 SV-2 Implementation Details: Surveillance Needlines

Prog.	SV-2 Needlines - Surveillance				Quant-ity	Communication Technology	BW (Kbps)	Comments
	Source		Sink					
	Node	System	Node	System				
LRR	Radar F	ARSR 1/2:ATCBI-6	ARTCC	ECG	29	DTS-RCL access	9.6	Position reports : Prime
LRR	Radar F	ARSR 1/2:Mod-S	ARTCC	ECG	16	DTS-RCL access	9.6	Position reports : Prime
LRR	Radar F	ARSR 3/4:ATCBI-5/6	ARTCC	ECG	54	DTS-RCL access	9.6	Position reports : Prime
LRR	Radar F	DoD:ATCBI-5/6	ARTCC	ECG	17	DTS-RCL access	9.6	Position reports : Prime
LRR	Radar F	DoD:Other	ARTCC	ECG	8	DTS-RCL access	9.6	Position reports : Prime
LRR	Radar F	Beacon Only:ATCBI-6	ARTCC	ECG	32	DTS-RCL access	9.6	Position reports : Prime
LRR	Radar F	ModS only:ModS	ARTCC	ECG	1	DTS-RCL access	9.6	Position reports : Prime
LRR	Radar F	SRR	ARTCC	ECG	2	DTS-RCL access	9.6	Position reports : Prime
		Total LRR radars			159			
LRR	ARTCC	Comm Node:ECG	ARTCC	Comm Node:ECG	397.5	DTS-BB	9.6	Position reports : BU
LRR	ARTCC	ECG - Broadcast	Multicast	N/A	20	NAS Ops IP	1,544	ECG Position Data - TX
SRR	radars	ASR-9	TRACON	STARS	42	DTS-cable access	28.8	Position reports : Prime
SRR	radars	ASR-9	TRACON	ARTS	73	DTS-cable access	28.8	Position reports : Prime
SRR	radars	ASR-9	ARTCC	ECG	12	DTS-cable access	9.6	Position reports : Prime
SRR	radars	ASR-7/8	TRACON	ARTS	88	cable	analog	Position reports : Prime
SRR	radars	ASR-11	TRACON	ARTS IIIE/STARS	15	DTS-cable access	128	Position reports : Prime
SRR	radars	ASR-11	TRACON	ARTS IIE	17	DTS-cable access	56	Position reports : Prime
		Total SRR			247			
SRR	TRACON	DCG - Broadcast	Multicast	N/A	48	NAS Ops IP	56	SRR Position reports : Tx
LRR	various	Authorized Joins	Multicast	N/A	10	NAS Ops IP	5,500	Position Data - RX
ASDE-X	ATCT	SMR	ATCT	ASDE-X Processor	40	DTS-cable access	56	Raw Plot Data
ASDE-X	ATCT	ASDE-X RU	ATCT	ASDE-X Processor	350	DTS-cable access	56	Multilat Data
ASDE-X	TRACON	STARS	ATCT	ASDE-X Processor	37	NAS Ops IP	256	Tracking Data
ASDE-X	TRACON	ARTS-3e	ATCT	ASDE-X Processor	18	NAS Ops IP	256	Tracking Data
ASDE-X	ATCT	ASDE-X Processor	ATCT	ASDEX Local	20	NAS Ops IP	256	Track Display
ASDE-X	ATCT	ASDE-X Processor	TRACON	ASDEX Remote	37	NAS Ops IP	256	Track Display
ASDE-X	ATCT	ASDE-X Processor	OEX	ASDE-X RSF	37	NAS Ops IP	256	Position Data Tx
ASDE-X	ATCT	ASDE-X Processor	OEX	ASDE-X RSF	1	NAS Ops IP	24,000	Position Data Rx
ASDE-X	ATCT	ASDE-X Processor	ATCT	PRM	37	DTS-cable access	256	Position Data Tx
ASDE-X	ATCT	ASDE-X Processor	ATCT	SMS	37	DTS-cable access	256	Position Data Tx

AS-IS SV-2 Summary

- Surveillance was used as a presentation example
  - Introduced concept and approach taken in defining how the service interfaces identified in the NAS SV-1 View are implemented
- Similar views are shown in backup charts for the other four areas
  - Command and Control information flows
  - Flight Data information flows
  - Weather information flows
  - Aeronautical information flows
- Backup materials also include definitions of the information flow areas and a mapping of NAS systems to these areas
  - Detailed legends for the various charts are also provided
- Roll-up chart was provided to provide an overview of the evolving telecommunications infrastructure
  - Baseline to project system expansion and establish a roadmap to the interim 2018 architecture and an envisioned 2025 target architecture

Background Slides

- SV-2 telecommunications view and associated data on the four remaining functional flow areas
  - Weather
  - Command & Control
  - Flight Flow
  - Aeronautical
- Reference Material
  - Functional Mission Area Definitions used to develop SV-2 views and associated data
- Telecommunications Terms and nomenclature
- FTI Optical Backbone Descriptions
- Legends Used in SV-2 Views
- Acronyms & Abbreviations used in SV-2 view

SV-2 Weather View*: 2009-2010

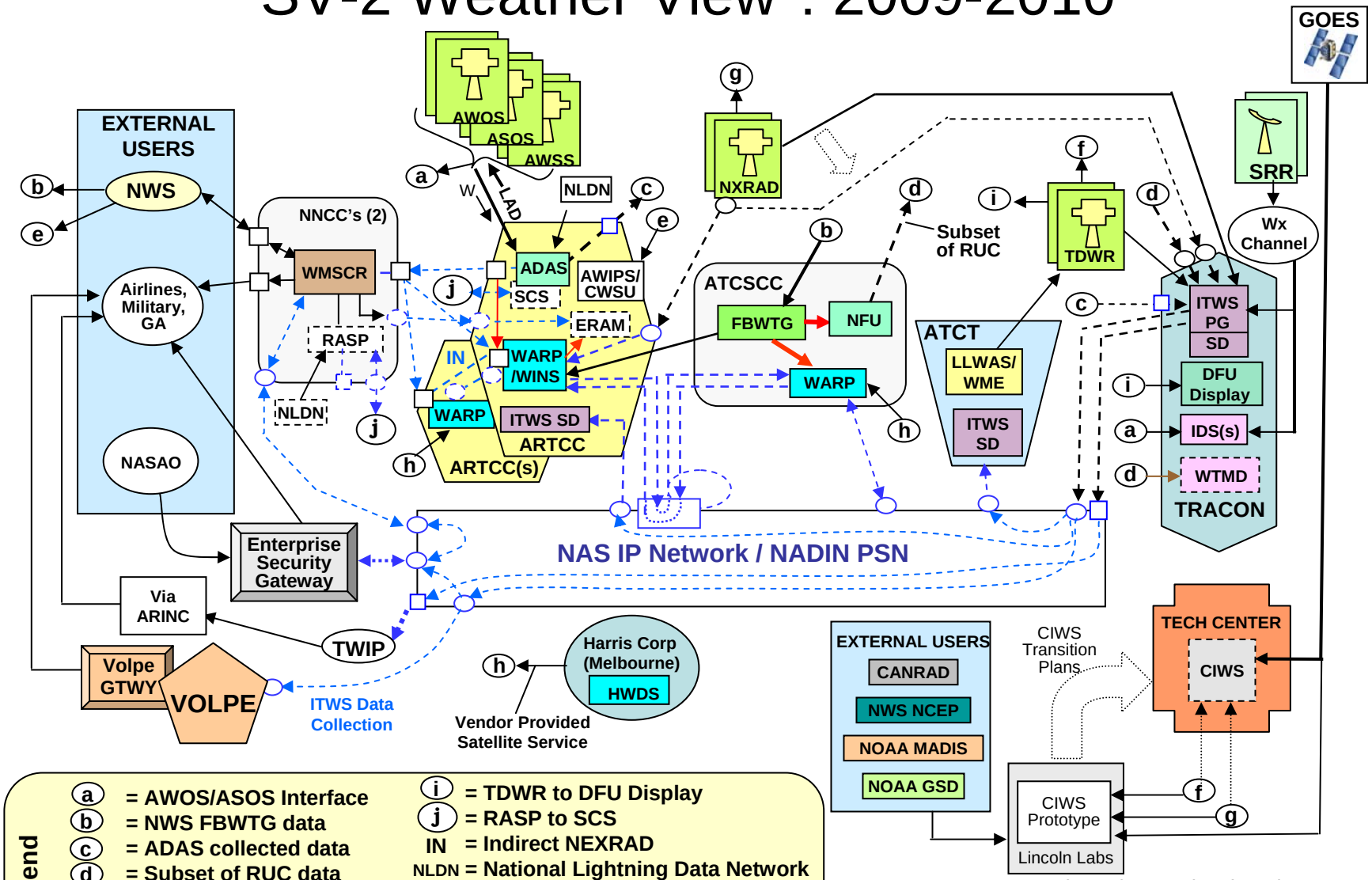

Legend

- a = AWOS/ASOS Interface
- b = NWS FBWTG data
- c = ADAS collected data
- d = Subset of RUC data
- e = NWS/AWIPS I/F
- f = TDWR/CIWS I/F
- g = NEXRAD/CIWS I/F
- h = HWDS Satellite service
- i = TDWR to DFU Display
- j = RASP to SCS
- IN = Indirect NEXRAD
- NLDN = National Lightning Data Network
- LAD = Lightning Activity Data
- ○ = NAS Ops IP Interface
- □ = NADIN PSN Interface
- W = Wx Sensor Observation Data

* Represents "Weather" view as developed from existing telecommunications services. Other LAN or system specific interfaces may exist that do no use telecommunications services.

NAS Telecommunications Summary - Weather

Programs/Projects	Service Type	Service Count	Bandwidth
ASOS	DTS	715	2406
ASOS	Ops IP	N/A	N/A
ADAS	DTS	38	242
ADAS	Ops IP	N/A	N/A
ITWS	DTS	227	75,872
ITWS	Ops IP	81	52,944
WARP	DTS	8	512
WARP	Ops IP	176	20,608
AWOS	DTS	28	35,648
AWOS	Ops IP	N/A	N/A
Others	DTS	585	34,272
Others	Ops IP	42	28,080
Total		1,900	250,584

2009 SV-2 Implementation Details: Weather Needlines (cont'd)

Prog.	SV-2 Needlines - Weather				Quant-ity	Communication Technology	BW (kbps)	Comments
	Source		Sink					
	Node	System	Node	System				
NEXRAD	Wx site	NEXRAD	TRACON	ITWS PG	49	DTS access	64	Sensor data
NEXRAD	Wx site	NEXRAD	TRACON	ITWS PG	10	Ops IP	64	Sensor data (emerging IP)
ITWS	radar	SRR	TRACON	ITWS PG	75	DTS access	9.6	Wx channel
ITWS	TRACON	ITWS PG	Volpe	ITWS Collect	36	Ops IP	64-128	ITWS data
ITWS	Volpe	ITWS Collect	External	Airlines	1	DTS Access	128	Sum of ITWS Data
ITWS	Volpe	ITWS/SWIM Server	External	Airlines	1	IP via GTWY	256	Sum of ITWS Data
ITWS	ATCSCC	NFU	TRACON	ITWS PG	36	Ops IP	96	Wx Data
ITWS	TRACON	ITWS PG	ARINC	TWIP	30	DTS to NADIN	56	Wx Data
ITWS	TRACON	ITWS PG	ARTCC	ITWS SD	50	Ops IP	64-128	ITWS data
ITWS	TRACON	ITWS PG	Terminal	ITWS SD	50	Ops IP	64-128	ITWS data
TDWR	Wx site	TDWR	TRACON	ITWS PG	45	DTS access	64	Wx Sensor data
TDWR	Wx site	TDWR	TRACON	ITWS PG	45	DTS	1536	Wx Sensor data
TDWR	Wx site	TDWR	ATCT	DFU		DTS	9.6	ATCTs w/o ITWS SD & as backup to ITWS SD
LLWAS	ATCT	LLWAS WME	TDWR	TDWR	45	DTS access	1.2	Wind Measurement

2009 SV-2 Implementation Details: Weather Needlines

Prog.	SV-2 Needlines - Weather				Quant-ity	Communication Technology	BW (kbps)	Comments
	Source		Sink					
	Node	System	Node	System				
ADAS	Wx site	AWOS/ASOS	ARTCC	ADAS	743	DTS access	2.4	METARs, OMOs, LAD
ADAS	ARTCC	ADAS	Wx site	AWOS/ASOS	"	"	2.4	NLDN LAD to sensors
ADAS	Wx site	AWOS/ASOS	TRACON	IDS(s)	40	DTS access	2.4	METARs, OMOs, LAD
ADAS	ARTCC	ADAS	NNCC	WMSCR	2	NADIN	64	METARs, OMOs, LAD
ADAS	ARTCC	ADAS	TRACON	IDS(s)	20	DTS access	64	METARs, OMOs, LAD
ADAS	ARTCC	ADAS	TRACON	ITWS PG	36	NADIN	64	OMO
ADAS	External	NLDN	ARTCC	ADAS	20	Commercial Satellite	9.6	Satellite brdcst of LAD
ADAS-R	NNCC	RASP	TRACON	ITWS PG	36	Ops IP	64	ADAS Rehost
ADAS-R	NNCC	RASP	ARTCC	ERAM	20	Ops IP	64	ADAS Rehost
ADAS-R	External	NLDN	NNCC	RASP	2	Commercial Satellite	9.6	ADAS Rehost: LAD
ADAS-R	ARTCC	SCS	NNCC	RASP	40	Ops IP	128	METARs, OMOs, LAD
WMSCR	NNCC	WMSCR	ARTCC	WARP	20	NADIN-->IP	128	Alphanumerics
WMSCR	NNCC	WMSCR	External	Various		NADIN-->IP		Alphanumerics, NOTAMS
WMSCR	NNCC	WMSCR	External	Airlines	12	NADIN-->IP	64	Alphanumerics, NOTAMS
WMSCR	External	NWS	NNCC	WMSCR	2	NADIN-->IP	64	Alphanumerics
WMSCR	NNCC	WMSCR	External	NWS	"	"	64	Alphanumerics
WARP	ARTCC	WARP	ATCSCC	WARP	20	NADIN-->IP	56	Regional Mosaic
WARP	ATCSCC	WARP	ARTCC	WARP	20	NADIN-->IP	128	National Mosaic
WARP	Wx site	NEXRAD	ARTCC	WARP	145	Ops IP Access	64	Sensor data
WARP	ARTCC	WARP	ARTCC	WARP	44	NADIN-->IP	128	Indirect Radar
FBWTG	External	NWS	ATCSCC	FBWTG	1	DTS access	1,544	FBWTG Source Data
FBWTG	ATCSCC	FBWTG	ARTCC	WARP	20	DTS BB	1,544	FBWTG Data

SV-2 Command & Control View*: 2009-2010

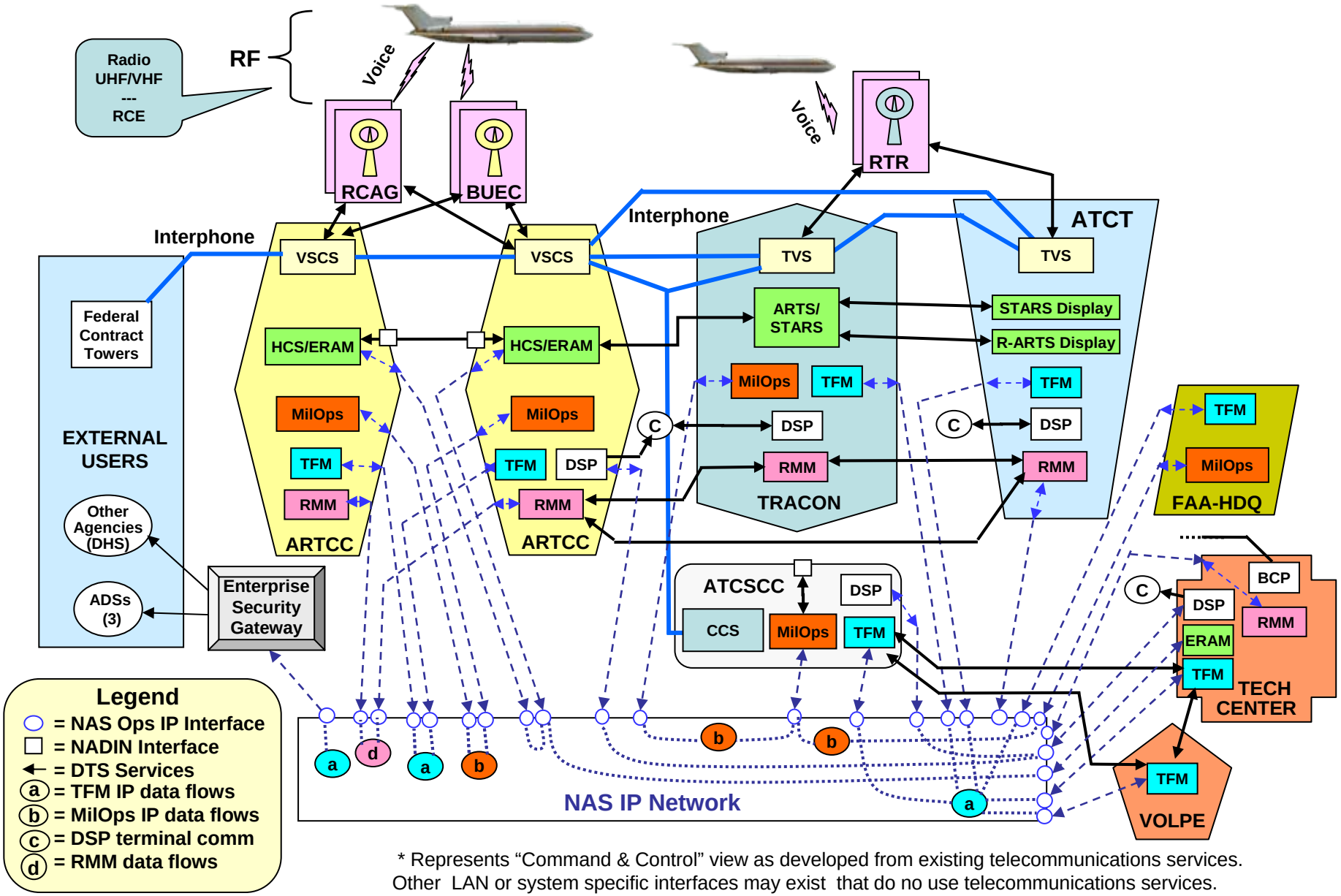

* Represents "Command & Control" view as developed from existing telecommunications services. Other LAN or system specific interfaces may exist that do no use telecommunications services.

SV-2 C&C Detailed A/G Comm View: 2009-2010

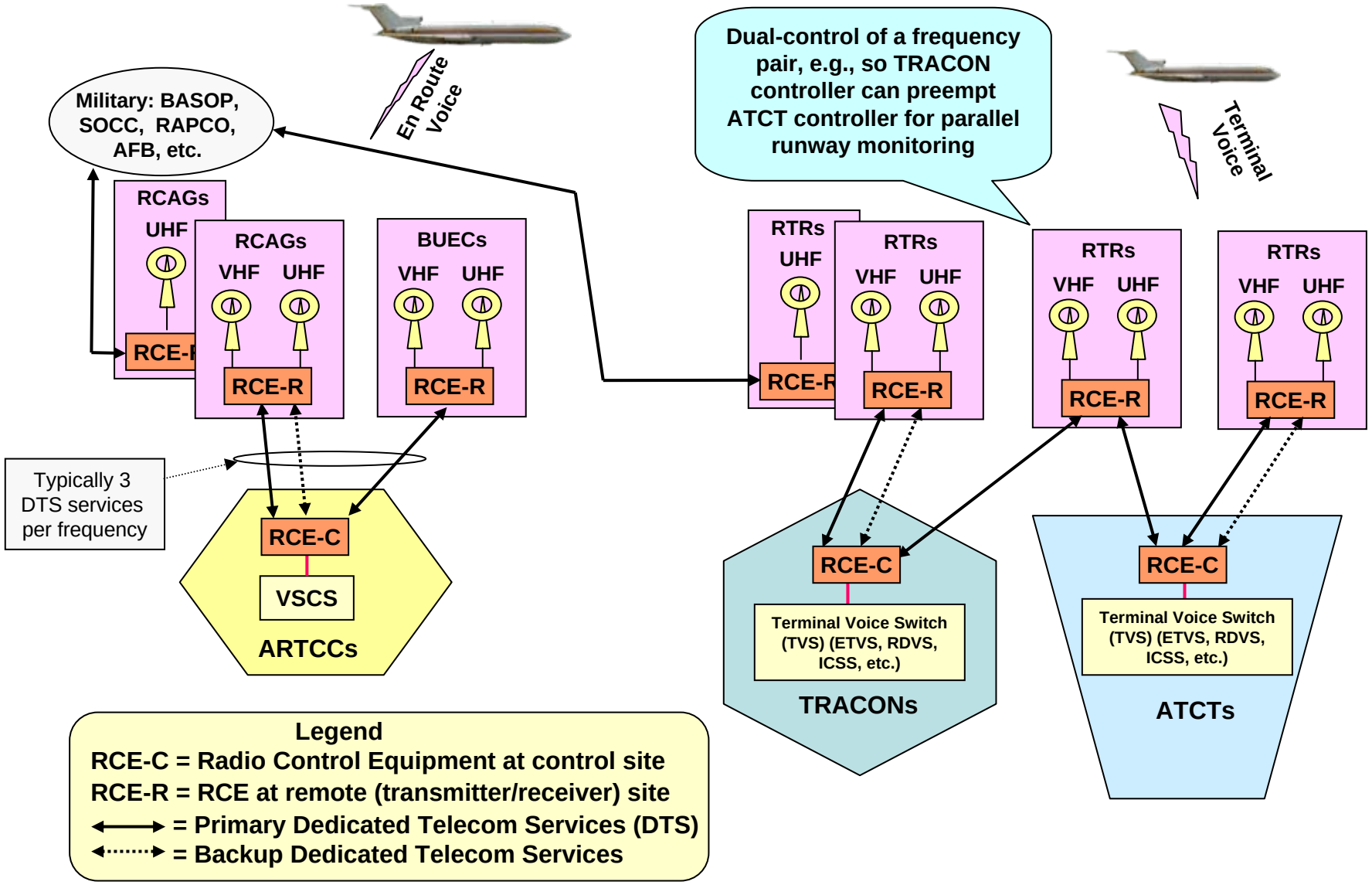

NAS Telecommunications Summary – Command/Control

Programs/Projects	Service Type	Service Count	Bandwidth (kbps)
A/G Voice	DTS	4,712	331,168
A/G Voice	Ops IP	N/A	N/A
Interphone	DTS	3,405	229,698
BCP	DTS	2	3072
BCP	Ops IP	3	134,208
ERAM	Ops IP	122	318,976
FS21	DTS	1,067	84,085
DBRITE	DTS	182	113,291
STARS	DTS	405	269,573
STARS	Ops IP	N/A	N/A
NDP	DTS	427	38,345
NDP	Ops IP	51	78,488
TFM	DTS	3	3,136
TFM	Ops IP	187	290,912
Others	DTS	2,451	80,986
Others	Ops IP	243	120,904
Total		13,260	2,096,842

SV-2 Implementation Details: Command & Control Needlines

Prog.	SV-2 Needlines - Command and Control				Quant-ity	Communication Technology	BW (Kbps)	Comments
	Source		Sink					
	Node	System	Node	System				
Interphone	ARTCC	VSCS	ARTCC	VSCS	204	DTS	64	Interphone voice
Interphone	ARTCC	VSCS	TRACON	TVS	526	DTS	64	Interphone voice
Interphone	ARTCC	VSCS	ATCT	TVS	109	DTS	64	Interphone voice
Interphone	ARTCC	VSCS	MLTDP	TVS	208	DTS	64	Interphone voice
Interphone	ARTCC	VSCS	Misc-Other	TVS	169	DTS	64	Misc-Other=> other facility types not itemized
Interphone (ARTCC to Any)					1216	DTS		
Interphone	TRACON	TVS	ATCT	TVS	503	DTS	64	Interphone voice
Interphone	TRACON	TVS	MLTDP	TVS	287	DTS	64	Interphone voice
Interphone	TRACON	TVS	Misc-Other	TVS	325	DTS	64	Misc-Other=> other facility types not itemized
Interphone (TRACON to Non-					1115	DTS		
Interphone	ATCT	TVS	ATCT	TVS	52	DTS	64	Interphone voice
Interphone	ATCT	TVS	MLTDP	TVS	427	DTS	64	Interphone voice
Interphone	ATCT	TVS	Misc-Other	TVS	40	DTS	64	Misc-Other=> other facility types not itemized
Interphone (ATCT to Non-ARTCC & Non-TRACON)					519	DTS		
Interphone (Misc-other to Non-ARTCC, Non-					555	DTS	64	Misc-Other=> other facility types not itemized
Interphone (Total)					3405	DTS		

2009 SV-2 Implementation Details: Command & Control Needlines – Con't

Prog.	SV-2 Needlines - Command and Control				Quant-ity	Communication Technology	BW (Kbps)	Comments
	Source		Sink					
	Node	System	Node	System				
TFM	WJHTC	TFM	ARTCC	TFM	21	NAS Ops IP	384	TC (Pri.Hub) distributes Natnl Mosaic to all sites (47 connections RMA4 w/avoidance)
TFM	WJHTC	TFM	TRACON	TFM	34	NAS Ops IP	384	TC (Pri.Hub) distributes Natnl Mosaic to all sites (68 connections RMA4 w/avoidance)
TFM	WJHTC	TFM	ATCT	TFM	18	NAS Ops IP	384	TC (Pri.Hub) distributes Natnl Mosaic to all sites (34 connections RMA4 w/avoidance) + 1
TFM	WJHTC	TFM	ARCTR	TFM	1	NAS Ops IP	384	TC (Pri.Hub) distributes Natnl Mosaic to all sites (2 connections RMA4 w/avoidance)
TFM	WJHTC	TFM	BASOP	TFM	1	NAS Ops IP	384	TC (Pri.Hub) distributes Natnl Mosaic to all sites (2 connections RMA4 w/avoidance)
TFM	WJHTC	TFM	CERAP	TFM	2	NAS Ops IP	384	TC (Pri.Hub) distributes Natnl Mosaic to all sites (4 connections RMA4 w/avoidance)
TFM	WJHTC	TFM	HDQ	TFM	6	NAS Ops IP	384	TC (Pri.Hub) distributes Natnl Mosaic to all sites (2 connections RMA4 w/avoidance)
TFM	WJHTC	TFM	RTR	TFM	2	NAS Ops IP	384	TC (Pri.Hub) distributes Natnl Mosaic to all sites
TFM	DCC	TFM	ARTCC	TFM	21	NAS Ops IP	128	Remote site pulls various info from DCC servers
TFM	DCC	TFM	TRACON	TFM	34	NAS Ops IP	128	Remote site pulls various info from DCC servers
TFM	DCC	TFM	ATCT	TFM	18	NAS Ops IP	128	Remote site pulls various info from DCC servers
TFM	DCC	TFM	ARCTR	TFM	1	NAS Ops IP	128	Remote site pulls various info from DCC servers
TFM	DCC	TFM	BASOP	TFM	1	NAS Ops IP	128	Remote site pulls various info from DCC servers
TFM	DCC	TFM	CERAP	TFM	2	NAS Ops IP	128	Remote site pulls various info from DCC servers
TFM	DCC	TFM	HDQ	TFM	6	NAS Ops IP	128	Remote site pulls various info from DCC servers

2009 SV-2 Implementation Details: Command & Control Needlines – Con't

Prog.	SV-2 Needlines - Command and Control				Quant-ity	Communication Technology	BW (Kbps)	Comments
	Source		Sink					
	Node	System	Node	System				
TFM	DCC	TFM	RTR	TFM	2	NAS Ops IP	128	Remote site pulls various info from DCC servers
TFM	VOLPE	TFM	ARTCC	TFM	21	NAS Ops IP	384	Volpe (Secondary Hub) distributes Natnl Mosaic to all sites (47 connections RMA4 w/avoidance)
TFM	VOLPE	TFM	TRACON	TFM	34	NAS Ops IP	384	TC (Sec. Hub) distributes Natnl Mosaic to all sites (68 connections RMA4 w/avoidance)
TFM	VOLPE	TFM	ATCT	TFM	18	NAS Ops IP	384	Volpe (Secondary Hub) distributes Natnl Mosaic to all sites (34 connections RMA4 w/avoidance) + 1
TFM	VOLPE	TFM	ARCTR	TFM	1	NAS Ops IP	384	Volpe(Sec.Hub) distributes Natnl Mosaic to all sites (2 connections RMA4 w/avoidance)
TFM	VOLPE	TFM	BASOP	TFM	1	NAS Ops IP	384	Volpe(Sec.Hub) distributes Natnl Mosaic to all sites (2 connections RMA4 w/avoidance)
TFM	VOLPE	TFM	CERAP	TFM	2	NAS Ops IP	384	Volpe (SEc.Hub) distributes Natnl Mosaic to all sites (4 connections RMA4 w/avoidance)
TFM	VOLPE	TFM	HDQ	TFM	6	NAS Ops IP	384	Volpe (Sec.Hub) distributes Natnl Mosaic to all sites (2 connections RMA4 w/avoidance)
TFM	VOLPE	TFM	RTR	TFM	2	NAS Ops IP	384	Vople (Sec.Hub) distributes Natnl Mosaic to all sites
TFM	SCC	TFM	VOLPE	TFM	1	DTS	1536	Misc Flight Info
TFM	VOLPE	TFM	ZNY	NADIN	1	DTS		ARINC connection
TFM	WJHTC	TFM	ZBW	NADIN	1	DTS		ARINC connection
TFM	WJHTC	TFM	VOLPE	TFM	2	NAS ED8 service	15000	Hub-toHub ED8 traffic flow
TFM	VOLPE	TFM	WJHTC	TFM	2	NAS ED8 service	15000	Hub-toHub ED8 traffic flow
DSP	ZNY ARTCC	HCS	WJHTC	DSP	1	NAS Ops IP	256	Flight Plan Data (2 RMA4 w/avoidance)
DSP	ZNY ARTCC	DSP	WJHTC	DSP	1	NAS Ops IP	2944	Flight Plan Data (2 RMA4 w/avoidance) for development support
DSP	ZNY ARTCC	DSP	ATCT	DSP	1	NAS Ops IP	128	Flight Plan Data (1 RMA3) for development support
DSP	SCC	DSP	WJHTC	DSP	1	NAS Ops IP	1024	Expected Departure Clearance Time Data (2 RMA4 w/avoidance)

2009 SV-2 Implementation Details: Command & Control Needlines – Con't

Prog.	SV-2 Needlines - Command and Control				Quant-ity	Communication Technology	BW (Kbps)	Comments
	Source		Sink					
	Node	System	Node	System				
DSP	WJHTC	DSP	ARTCC	DSP	3	NAS Ops IP	256-3072	Integrated Departure Sequencing Data and develpment support data
DSP	WJHTC	DSP	ZNY ARTCC	DSP	1	DTS	1536	Integrated Departure Sequencing Data
DSP	WJHTC	DSP	TRACON	DSP	2	DTS	1536	Integrated Departure Sequencing Data
DSP	WJHTC	DSP	ATCT	DSP	6	DTS	1536	Integrated Departure Sequencing Data
ARMT	TRACON	ARMT	ATCT	ARMT	11	NAS Ops IP	512	Terminal Traffic Management Reports, Arrival/Taxi List, Arrival/Departure Demand, Flight Delay Data
ARMT	TRACON	ARMT	ARTCC	ARMT	11	NAS Ops IP	512	Terminal Traffic Management Reports, Arrival/Taxi List, Arrival/Departure Demand, Flight Delay Data
ARMT	TRACON	ARMT	ATCSCC	ARMT	1	NAS Ops IP	512	Terminal Traffic Management Reports, Arrival/Taxi List, Arrival/Departure Demand, Flight Delay Data
ARMT	WJHTC	ARMT	TRACON	ARMT	12	NAS Ops IP	512	Terminal Traffic Management Reports, Arrival/Taxi List, Arrival/Departure Demand, Flight Delay Data
ARMT	WJHTC	ARMT	ATCT	ARMT	10	NAS Ops IP	512	Terminal Traffic Management Reports, Arrival/Taxi List, Arrival/Departure Demand, Flight Delay Data
ARMT	WJHTC	ARMT	ARTCC	ARMT	8	NAS Ops IP	512	Terminal Traffic Management Reports, Arrival/Taxi List, Arrival/Departure Demand, Flight Delay Data
ARMT	WJHTC	ARMT	ATCSCC	ARMT	1	NAS Ops IP	512	Terminal Traffic Management Reports, Arrival/Taxi List, Arrival/Departure Demand, Flight Delay Data

2009 SV-2 Implementation Details: Command & Control Needlines

Prog.	SV-2 Needlines - Command and Control				Quant-ity	Communication Technology	BW (Kbps)	Comments
	Source		Sink					
	Node	System	Node	System				
MilOps	ARTCC	MilOps	DCC	MilOps	21	NAS Ops IP	64-256	# flows
MilOps	CERAP	MilOps	DCC	MilOps	2	NAS Ops IP	64-256	# flows
MilOps	TRACON	MilOps	DCC	MilOps	3	NAS Ops IP	64-256	# flows
MilOps	FAA-HDQ	MilOps	DCC	MilOps	1	NAS Ops IP	64	# flows
RMM	ARTCC	RMM	TRACON	RMM	404	DTS	2.4-64	
RMM	ARTCC	RMM	ATCT	RMM	345	DTS	2.4-64	
RMM	TRACON	RMM	ATCT	RMM	61	DTS	2.4-64	
RMM	Misc-other	RMM	Misc-other	RMM	885	DTS	2.4-64	
RMM (DTS Total)					1695			
RMM	ARTCC	RMM	WJHTC	RMM	21	NAS Ops IP		Maint. Processor Sys (MPS) events, alarms
RMM	CERAP	RMM	WJHTC	RMM	1	NAS Ops IP		Maint. Processor Sys (MPS) events, alarms
RMM	SCC	RMM	WJHTC	RMM	1	NAS Ops IP		Maint. Processor Sys (MPS) events, alarms
RMM	TRACON	RMM	WJHTC	RMM	1	NAS Ops IP		Maint. Processor Sys (MPS) events, alarms
RMM	ARTCC	RMM	ARCTR	RMM	21	NAS Ops IP		DMN Network Mgmt Logs Transfer
RMM	CERAP	RMM	ARCTR	RMM	2	NAS Ops IP		DMN Network Mgmt Logs Transfer
RMM	TRACON	RMM	ARCTR	RMM	5	NAS Ops IP		DMN Network Mgmt Logs Transfer
A/G Voice	ARTCC	VSCS	RCAG	RCE	tbd	DTS	64	Air/Ground Voice
A/G Voice	ARTCC	VSCS	BUEC	RCE	tbd	DTS	64	Air/Ground Voice
A/G Voice	ARTCC	VSCS	RCAG/BUEC	RCE	3149	DTS	64	Air/Ground Voice
A/G Voice	TRACON	TVS	RTR	RCE	tbd	DTS	64	Air/Ground Voice
A/G Voice	ATCT	TVS	RTR	RCE	tbd	DTS	64	Air/Ground Voice
A/G Voice	TRACON/ATCT	TVS	RTR	RCE	1555	DTS	64	Air/Ground Voice
A/G Voice (Total)					4712	DTS		

2009 SV-2 Implementation Details: Command & Control Needlines

Prog.	SV-2 Needlines - Command and Control				Quant-ity	Communication Technology	BW (Kbps)	Comments
	Source		Sink					
	Node	System	Node	System				
ERAM	ARTCC	ERAM	ARTCC	ERAM	44	NAS Ops IP	3072	Most data is to neighbor ERAM
ERAM	ARTCC	ERAM	ARTCC	URET	44	NAS Ops IP	512	Neighbor URET during ERAM transition
ERAM	WJHTC	ERAM	ARTCC	ERAM	20	NAS Ops IP	2688	ERAM Support
IDAT	ARTCC	HCS	ARTCC	HCS	47	DTS	2.4	
IDAT	ARTCC	HCS	TRACON	ARTS/STARS	46	DTS	2.4	
IDAT	ARTCC	HCS	ATCT	STARS Display	10	DTS	2.4	
ARTS	ARTCC	HCS	TRACON	ARTS	108	DTS	2.4-9.6	
ARTS	ARTCC	HCS	Misc-other	ARTS	4	DTS	2.4	
ARTS	TRACON	ARTS	TRACON	ARTS	6	DTS	56	
ARTS	TRACON	ARTS	ATCT	ARTS	216	DTS	56-64	
ARTS	TRACON	ARTS	Misc-other	ARTS	3	DTS	56-64	
STARS	ARTCC	STARS	TRACON	STARS	2	DTS	2.4	IDAT and/or ARSR
STARS	TRACON	STARS	ATCT	STARS	347	DTS	256-1024	DBRITE Replacement - Fully redundant; Full svc 1024, Emergency svc 256
STARS	TRACON	STARS	Misc-other	STARS	4	DTS	1024	
STARS	Misc-other	STARS	Misc-other	STARS	48	DTS	1024	

SV-2 Flight Data View*: 2009-2010

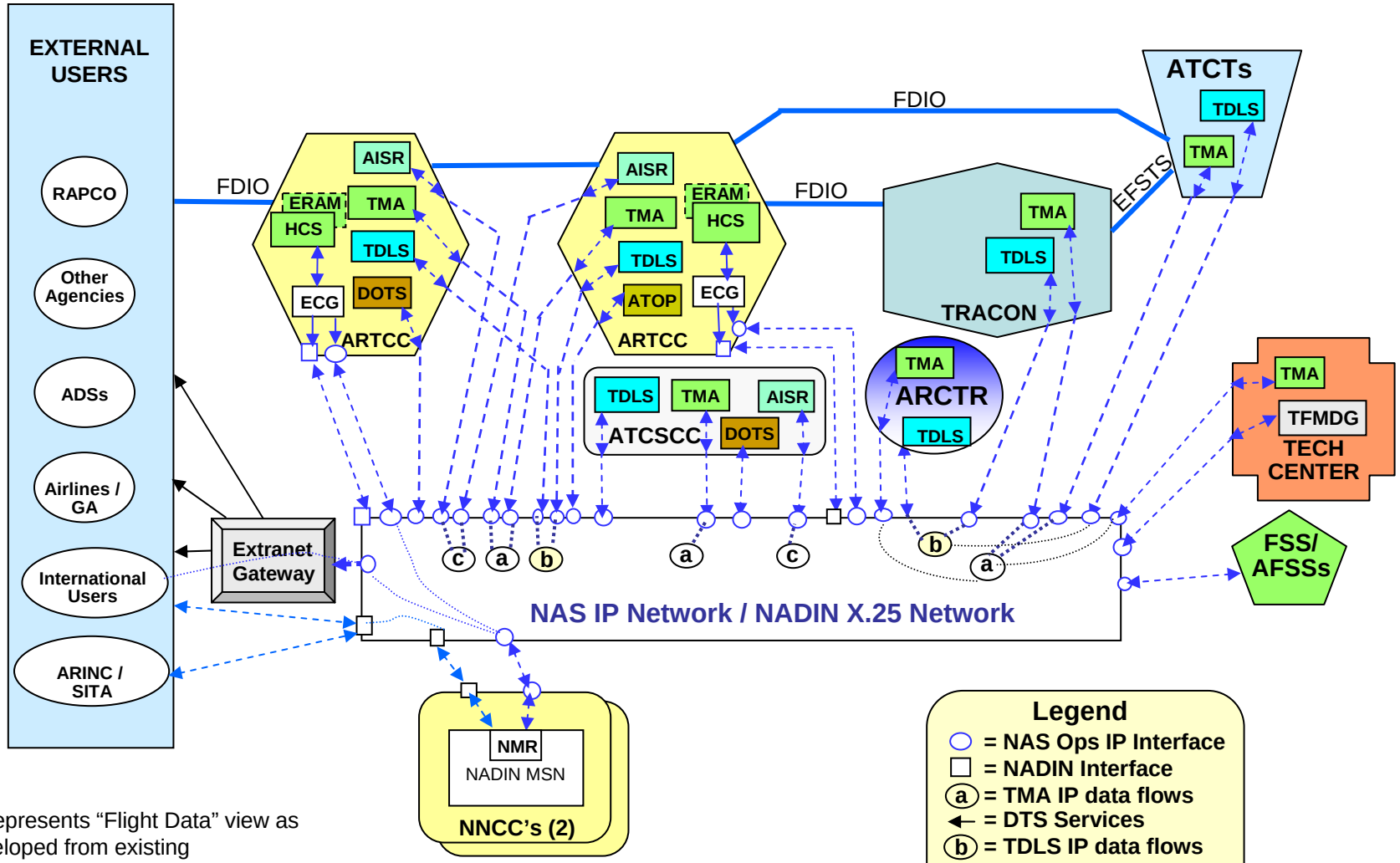

* Represents "Flight Data" view as developed from existing telecommunications services. Other LAN or system specific interfaces may exist that do no use telecommunications services.

NAS Telecommunications Summary – Flight Data

Programs/Projects	Service Type	Service Count	Bandwidth (kbps)
FDIO	DTS	582	1,418
FDIO	Ops IP	N/A	N/A
TMA	DTS	2	3,072
TMA	Ops IP	88	99,520
TDLS	DTS	69	226
TDLS	Ops IP	77	8,768
ATOP	DTS	3 (3x2.4)	7
ATOP	Ops IP	5	3072
DOTS	DTS	N/A	N/A
DOTS	Ops IP	10	640
EFSTS	DTS	37	146
EFSTS	Ops IP	N/A	N/A
Others	DTS	8	464
Others	Ops IP	3	256
Total		884	117,590

2009 SV-2 Implementation Details: Flight Data Needlines

Prog.	SV-2 Needlines - Flight Data				Quant-ity	Communication Technology	BW (Kbps)	Comments
	Source		Sink					
	Node	System	Node	System				
FDIO	ARTCC	FDIO	ATCT	FDIO	343	DTS	2.4	Flight Plan Data
FDIO	ARTCC	FDIO	TRACO	FDIO	184	DTS	2.4	Flight Plan Data
FDIO	ARTCC	FDIO	AFSS	FDIO	1	DTS	2.4	Flight Plan Data
FDIO	ARTCC	FDIO	ANGB	FDIO	1	DTS	2.4	Flight Plan Data
FDIO	ARTCC	FDIO	ARAC	FDIO	2	DTS	2.4	Flight Plan Data
FDIO	ARTCC	FDIO	BASOP	FDIO	3	DTS	2.4	Flight Plan Data
FDIO	ARTCC	FDIO	FACS	FDIO	2	DTS	2.4	Flight Plan Data
FDIO	ARTCC	FDIO	NXX NAS	FDIO	1	DTS	2.4	Flight Plan Data
FDIO	ARTCC	FDIO	RAPCO	FDIO	25	DTS	2.4	Flight Plan Data
FDIO	ARTCC	FDIO	RATCF	FDIO	8	DTS	2.4	Flight Plan Data
FDIO	ARTCC	FDIO	RCO	FDIO	7	DTS	2.4	Flight Plan Data
FDIO	CERAP	FDIO	ATCT	FDIO	2	DTS	2.4	Flight Plan Data
FDIO (Total)					579		2.4	
EFSTS	ATCT	EFSTS	TRACO	EFSTS	47	DTS	2.4	Flight Plan Data
EFSTS	TRACO	EFSTS	TRACO	EFSTS	2	DTS	2.4	Flight Plan Data
EFSTS (Total)					49		2.4	
TMA	ARTCC	TMA	ARTCC	TMA	81	NAS OPIP	3	Flight Plans and Radar Tracks, relevant to the remote ARTCC (Ops String)
TMA	ARTCC	HCS/ERAM	ARTCC	TMA	81	NAS OPIP	3	Flight Plans and Radar Tracks, relevant to the remote ARTCC (Support String)
TMA	ARTCC	HCS/ERAM	ARTCC	TMA	20	NAS OPIP	21	Intra-ARTCC Comm, All Flight Plans and Radar Tracks
TMA	ARTCC	TMA	TRACO	TMA	33	NAS OPIP	19 - 300	Flight Plan and Radar tracks for Display Terminals
TMA	ARTCC	TMA	SCC	TMA	12	NAS OPIP	128	Flight Plan and Radar tracks for Display Terminals, plan to increase number of flows to 20 or more. VNC
TMA	TRACO	TMA	ARTCC	TMA	33	NAS OPIP	6 - 40	STARS and ARTS data from TRACON to ARTCC
TMA	TRACO	TMA	ATCT	TMA	13	NAS OPIP	19	Flight Plan and Radar tracks for Display Terminals

2009 SV-2 Implementation Details: Flight Data Needlines – Con't

Prog.	SV-2 Needlines - Flight Data				Quant-ity	Communication Technology	BW (Kbps)	Comments
	Source		Sink					
	Node	System	Node	System				
TMA	WJHTC	TMA	ARTCC	TMA	20	NAS OPIP	100+	20 flows CRWS Weather
TMA	WJHTC	TMA	ARCTR	TMA	1	NAS OPIP	20	Flight Plans and Radar Tracks, Infrequently used for training purposes
TMA	ARTCC	TMA	Volpe	TMA	1	NAS OPIP	100+	1 flows Collaborative Arrival Planning, through gateway, possible external users in the future.
TMA	ARTCC	TMA	ARTCC	TMA	2	DTS	1536	ZFW Pt-Pt to ZHU and ZDV (legacy)
TDLS	ATCT	TDLS	ARCTR	TDLS	30	NAS OPIP	56	RMA4 - PDC & D-ATIS Messages
TDLS	CERAP	TDLS	ARCTR	TDLS	2	NAS OPIP	56	RMA4 - PDC & D-ATIS Messages
TDLS	SLC NADIN	TDLS	ARCTR	TDLS	1	NAS OPIP	1536	RMA4 - S-CAOSS Server Database Sync
TDLS	SCC	TDLS	ARCTR	TDLS	1	NAS OPIP	1536	RMA4 - S-CAOSS Server Database Sync
TDLS	TRACO	TDLS	ARCTR	TDLS	40	NAS OPIP	56 - 64	RMA4 - PDC & D-ATIS Messages
TDLS (total)					74	NAS OPIP	56 - 1536	
TDLS	ARINC	TDLS	ARTCC	TDLS	1	DTS	56	RMA4 - Flight Plan and PDC
TDLS	ATCT	TDLS	ARTCC	TDLS	29	DTS	2.4	RMA4 - Flight Plan and PDC
TDLS	BASIC	TDLS	ARTCC	TDLS	1	DTS	2.4	RMA4 - Flight Plan and PDC
TDLS	TRACO	TDLS	ARTCC	TDLS	38	DTS	2.4	RMA4 - Flight Plan and PDC
TDLS (total)					69	DTS	2.4 - 56	
AISR	ARTCC	AISR	SCC	AISR	20	NAS Ops IP	64-1024	Flight Plans
AISR	CERAP	AISR	SCC	AISR	2	NAS Ops IP	64-128	Flight Plans
AISR	NNCC	AISR	SCC	AISR	1	NAS Ops IP	512	Flight Plans
AISR	ARTCC	AISR	NNCC	AISR	20	NAS Ops IP	64-512	Flight Plans
AISR	CERAP	AISR	NNCC	AISR	2	NAS Ops IP	64-128	Flight Plans
DOTS	ARTCC	DOTS	WJHTC	DOTS	3	NAS Ops IP	64	Oceanic Flight Tracks, WINS, Separation Data
DOTS	WJHTC	DOTS	SCC	DOTS	1	NAS Ops IP	64	Oceanic Flight Tracks, WINS, Separation Data
NADIN	NNCC	NADIN-I	ARTCC	various	40	NADIN II X.25		Flight Plans
NADIN	NNCC	NADIN-I	ARTCC	ECG	40	NAS Ops IP	256-384	Flight Plans

SV-2 Aeronautical Information View*: 2009-2010

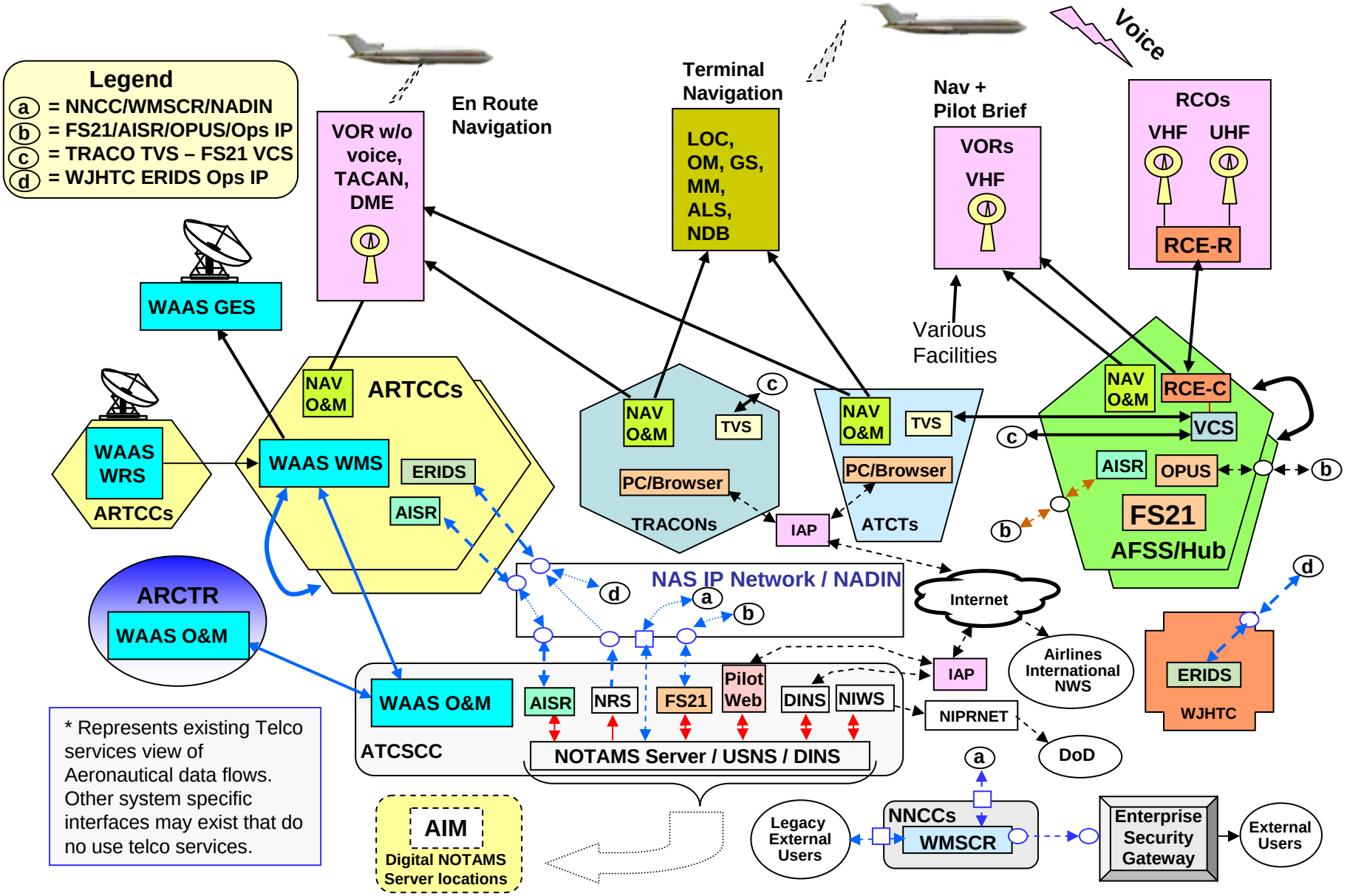

* Represents existing Telco services view of Aeronautical data flows. Other system specific interfaces may exist that do no use telco services.

NAS Telecommunications - Aeronautical

Programs/Projects	Service Type	Service Count	Bandwidth (kbps)
A/G Voice	DTS	2578	164,992
A/G Voice	Ops IP	N/A	N/A
FS21	DTS	824	732,756
FS21	Ops IP	10	30,080
ENAV	DTS	467	29,590
ENAV	Ops IP	N/A	N/A
TNAV	DTS	187	14,604
TNAV	Ops IP	N/A	N/A
WASS	DTS	89	51,840
WASS	Ops IP	N/A	N/A
AISR	DTS	N/A	N/A
AISR	Ops IP	48	11,648
Others	DTS	131	11,790
Others	Ops IP	129	28,672
Total		4463	1,075,972

2009 SV-2 Implementation Details: Aeronautical Needlines

Program	SV-2 Needlines - Aeronautical				Quant-ity	Communications Technology	BW (kbps)	Comments
	Source		Sink					
	Node	System	Node	System				
A/G Voice	AFSS	VCS	Radio Facility	RCO, VOR	2887	DTS	64	Flight advisory services
ENAV	AFSS	Nav O&M	Nav Facilitly	VORs	636	DTS	64	En route navigation from FSSs
ENAV	Various	Nav O&M	Nav Facilitly	VORs	127	DTS	64	From ARTCCs, TRACONs, ATCTs
FS21	AFSS	FS21	FSS	FS21	263	DTS	T1/T3	Various services multiplexed into T1s or T3s
TNAV	TRACOs, ATCTs	Nav O&M	Nav Facilitly	OM, LOC, etc	206	DTS	64	Outer marker, localizer
WAAS	ARTCC	WRS	ARTCC	WMS	76	DTS, ANICS	64	38 WRS send to 2 WMSs each
WAAS	ARTCC	WMS	ARTCC	WMS	8	DTS	1536	
WAAS	ARTCC	WMS	GES	GES	8	DTS	128	Each of 4 GES's is fed by 2 WMSs
WAAS	ARTCC	WMS	OCC	O&M	8	DTS	1536	WAAS O&M by OCCs at SCC and SCT
WAAS	OCC	NOCC	ARTCTR	O&M, Support	16	DTS & FTS2001	1536	2nd level support @ ARCTR and contractor site
NOTAMS	ATCSCC	AISR	ARTCC, CERAP	AISR	48	Ops IP	64-1536	NOTAMS between ARTCCs & CERAPs (2 x 64 -120 kbps at each) & ATCSCC (2 x 1536).
NOTAMS	ATCSCC	NAIMES	FS21	OPUS	2	Ops IP	3072	NOTAMS. 3072 kbps
NOTAMS	ATCSCC	NAIMES	FS21	AISR	2	Ops IP	3072	Back up to OPUS. TBC: Is this an Ops IP connection?
NOTAMS	ATCSCC	NRS	ARTCC	ERIDS	20	Ops IP	512	
NOTAMS	ARTCC	ERIDS	WJHTC	ERIDS	20	Ops IP	512	For BCP from all ARTCCs & Support
NOTAMS	ATCSCC	USNS	NNCC	WMSCR	2	PSN	128	NOTAMS via X.25 Packet Switching Network
NOTAMS	ATCSCC	PilotWeb, DINS	TRACO, ATCT	See cmnt	--	Internet, Ops IP	--	NOTAMs distribution via Internet; ~10 TRACONs/ATCTs use 64 kbps Ops IP
G/G Voice	TRACOs, ATCTs	TVS	FS21	VCS			64	Terminal facility personnel call FS21 personnel who enter NOTAMs via OPUS or AISR
A/G Voice	AFSS	VCS	Radio Facility	RCO, VOR	1754	DTS	64	Advisory voice from AFSS via RCAG, RCO, VOR, RTR or BUEC
A/G Voice	AFSS	VCS	Various		714		64	Sink site is other type of facility, e.g. ATCT, TRACO, were radio could be collocated, or sink could be a relay site
A/G Voice	Various	VCS	Various		110		64	Various nodes, e.g., ARTCC to VOR or TRACO to RTR. These are probably relays

Background: Functional (data flow) Categories

- **Flight Data**: Flight Plan and/or Flight Profile data, including entry, activation, status tracking and configuration management in the NAS ATC system for the purposes of flight management.
- **Command/Control and ATC Data**: Services associated with ATC activities supporting safe and efficient separation of aircraft; also includes management & distribution of data defining NAS infrastructure assets and their operational status as well as the management of the allocation or modification of NAS airspace asset status and associated airspace definitions.
- **Surveillance:** Data about current location of aircraft, and surface vehicles, buildings and other non-meteorological obstructions to aircraft in the NAS airspace; surveillance includes both the:
  1. Collection of aircraft position reports from sensors to Surveillance Processing Subsystems for both En Route (e.g. HCS/ERAM) and terminal (e.g. ARTS and STARS) and
  2. Secondary dissemination of radar position reports to other functional areas: such as BCP recovery facilities agencies and other gov't agencies.

Functional (data flow) Categories (Con't)

- **Aeronautical**: Production, management and distribution of Navigation and other data produced for pilots about the NAS airspace and the NAS air traffic control system and its assets. Data provided includes airspace definitions, navigational and communication aids and procedures, and changes to them including all NAS notifications (such as Notice to Airmen, NOTAMS) and other related reports. Also includes advisory activities such as interactions with AFSSs.
- **Weather**: Data about atmospheric or meteorological conditions in the NAS airspace; including collection of data from weather sensors to weather processing subsystems and the dissemination and distribution of weather products to and amongst ATC systems.

Background: Direct On-Net Facilities

(8 ARTCCs, 4 TRACONs, 2 ATCTs, 2 NNCCs, 2 FS21s, WJHTC)

- ACY/WJHTC Atlantic City
- ZTL/ARTCC Atlanta
  - A80/TRACO
  - ATL/ATCT
  - ATL/NADIN
- ZBW/ARTCC Boston
  - F90/TRACO
  - BOS/VNTSC
- ZAU/ARTCC Chicago
  - ELG/TRACO
  - ORD/ATCT
- ZFW/ARTCC Dallas-Ft Worth
  - FTWC/CORP
- ZDC/ARTCC Washington
  - PCT/TRACO
  - JYO/CORP
  - DCC/SCC
- ZLC/ARTCC Salt Lake City
  - SLC/NADIN
- ZSE/ARTCC Seattle
- ZLA/ARTCC Los Angeles

Background: Access On-Net Facilities

(12 ARTCCs, 1 ARCTR)

- OEX/ARCTR Oklahoma City
- ZAB/ARTCC Albuquerque
- ZDV/ARTCC Denver
- ZHU/ARTCC Houston
- ZID/ARTCC Indianapolis
- ZJX/ARTCC Jacksonville
- ZKC/ARTCC Kansas City
- ZMA/ARTCC Miami
- ZME/ARTCC Memphis
- ZMP/ARTCC Minneapolis
- ZNY/ARTCC New York
- ZOA/ARTCC Oakland
- ZOB/ARTCC Cleveland

Background: Adding Additional On-Net Facilities

- Once the first rollout of the Backbone is completed, additional facilities and connections will be evaluated
- Additional CoLo's with new direct access rings
  - e.g. 11 access ARTCCs could become Direct On-Net
- Additional facilities to be connected by fiber access connections to existing CoLo's
- Cluster facilities directly connected to On-Net facilities
- Any major facility to be added (such as a NextGen Facility) would require an assessment as to the most appropriate manner to connect to the backbone

Detailed Legend

= Dedicated Telecommunication Service (DTS)
= Dashed line represents IP or NADIN
= NAS Ops IP Interface
= NADIN II Interface. Most points-of-presence are at ARTCCs, but the square may not reflect physical location of NADIN II access point
= Dotted line represents a data flow within the IP or NADIN Network
(a) = Connector symbol. Look for other symbol(s) with the same letter

Variations on the Above Symbols

Dashed polygon (as opposed to a dashed line) represents and upcoming/emerging entity:

= Upcoming System. Also, an existing system with upcoming needline, e.g. NLDN to RASP
= Upcoming Ops IP Interface

Blue line represents a backbone service

Black line represents an off-backbone service, including an off-backbone site to a backbone site

Brown line represents a telecommunications service for which the characteristics are TBD, e.g. the emerging ADS-B services

A red arrow represents an intrafacility connection

Needlines Table

- Quantity is the number of data flows, not the number of services/circuits. Examples:
  - 700 weather sensors send data to 20 ARTCCs, but each sensor feeds only 1 ARTCC: Quantity 700
  - ADASs at 20 ARTCCs, each of which sends data to WMSCR at two NNCCs: Quantity is 40
- B/W is the load, not the data rate of the service/circuit:
  - In many cases, a primary and a backup service is ordered, but the needline table reports the B/W for a single service.
  - ERAM has four 3,072 operational services at each ARTCC, but ERAM only uses one of the four at a time. Therefore, the needlines table reports 3,072 kbps
  - A single RMA3 service has dual paths in the network, but the needlines table shows the B/W for a single path
- An individual needline row in the table shows a data flow segment, which is not the necessarily the original source or final destination

Acronyms & Abbreviations

- ACY Location Identifier for WJHTC
- ADAS AWOS Data Acquisition System
- ADS Air Defense Sector
- ADS-B Automatic Dependant Surveillance – Broadcast
- AFB Air Force Base
- AIM Advanced Information Management System
- AISR Aeronautical Information System Replacement
- ALS Approach Lighting System
- ARCTR Aeronautical Center in Oklahoma City
- ARINC Aeronautical Radio, Inc
- ARMT Airport Resource Management Tool
- ARSR Air Route Surveillance Radar
- ARTCC Air Route Traffic Control Center
- ARTS Automated Radar Terminal System
- ASDE Airport Surface Detection Equipment
- ASOS Automated Surface Observing System
- ASR Airport Surveillance Radar
- ATCBI Air Traffic Control Beacon Interrogator
- ATCSCC Air Traffic Control System Command Center
- ATCT Airport Traffic Control Tower
- ATOP Advanced Technologies and Oceanic Procedures
- AWIPS Advanced Weather Interactive Processing System
- AWIS Airport Weather and Information System
- AWOS Automated Weather Observing System
- AWSS Automated Weather Sensor System
- BASOP Base Operations
- BCP Business Continuity Planning
- BPS Boundary Protection Service
- BUEC Back-up Emergency Communications
- B/W Bandwidth
- BWM Bandwidth Manager
- CANRAD Canadian Radar
- CCS Conference Control System - replaced the Operational Telephone Switch at the ATCSCC
- CERAP Center En route Radar Approach Control
- CIWS CONUS Integrated Weather System
- CoLo Collocation
- CWSU Center Weather Service Unit
- DCC LID for ATCSCC
- DCG Data Communications Gateway
- DFU Display Functional Unit
- DHS Department of Homeland Security
- DINS Defense Internet NOTAM Services
- DME Distance Measuring Equipment
- DMN Data Multiplexing Network
- DOD Department of Defense
- DOTS Dynamic Ocean Track System
- DSP Departure Spacing Program
- DTS Dedicated Telecommunications Service
- DWDM Dense Wavelength Division Multiplexing
- ECG En Route Communications Gateway
- ED8 Enhanced Data 8 (extranet gateway)
- ENAV En route navigation

Acronyms & Abbreviations (cont'd)

- ENAV — En route navigation
- ERAM — En Route Automation Modernization
- ERIDS — En Route Information Display System
- ESL — Emergency Service LAN
- ETVS — Enhanced Terminal Voice Switch
- FBWTG — FAA Bulk Weather Telecommunications Gateway
- FIDO — Flight Inspection District Office
- FIS-B — Flight Information Service – Broadcast
- FS21 — Flight Services 21st Century
- FSL — Full Service LAN
- FTI — FAA Telecommunications Infrastructure
- GA — General Aviation
- GES — Ground Earth Station
- GOES — Geostationary Operational Environmental Satellite
- GWDS — Graphic Weather Display System
- GS — Glide Slope Indicator
- GSD — Global Systems Division
- HCS — Host Computer System
- HWDS — Harris Weather Data Service
- IAP — Internet Access Point
- ICSS — Integrated Communications Switching System
- IDS — Information Display System
- IP — Internet Protocol
- ITWS — Integrated Terminal Weather System
- kbps — kilobits per second
- LAD — Lightning Activity Data
- LDRCL — Low-Density RCL
- LID — Location ID
- LLWAS — Low Level Wind Shear Alert System
- LOC — Localizer
- LRR — Long-range Radar
- MADIS — Meteorological Assimilation Data Ingest System
- METARs — Meteorological Aerodrome Reports
- MILOPS — Military Operations
- MLTDP — Multidrop
- MM — Middle Marker
- MSN — Message Switching Network
- NADIN — National Airspace Data Interchange Network
- NAIMES — NAS Aeronautical Information Management Enterprise System
- NAS — National Airspace System
- NASAO — National Association of State Aviation Officials
- NAV — Navigation
- NCEP — National Centers for Environmental Prediction
- NEXRAD — Next Generation Weather Radar
- NFU — National Wx Service Filter Unit
- NIPRNET — N-level Internet Protocol Router Network
- NLDN — National Lightning Detection Network
- NMR — NADIN Message Switch Replacement Project
- NNCC — National Network Control Center
- NOAA — National Oceanic and Atmospheric Administration
- NDB — Nondirectional Beacon
- NOTAM — Notice to Airmen
- NRS — NOTAMS Retrieval System
- NWS — National Weather Service

Acronyms & Abbreviations (cont'd)

- OEX — LID for the FAA Aeronautical Center
- OM — Outer Marker
- O&M — Operations and Maintenance
- OMOs — One-Minute Observations
- PDC — Pre-Departure Clearance
- PG — Product Generator
- PRM-A — Precision Runway Monitor Alternate
- PSN — Packet Switching Network
- RAPCO — Radar Approach Control
- RASP — Regional ADAS Service Processor
- RCAG — Remote Communications Air/Ground Facility
- RCE — Remote Communications Equipment
- RCE-C — RCE Control
- RCE-R — RCE Remote
- RCL — Radio Communications Link
- RCO — Remote Communications Outlet
- RDVS — Rapid Deployment Voice Switch
- RF — Radio Frequency
- RMA*n* — Reliability, Maintainability, and Availability level *n* provided for FTI service
- RMM — Remote Maintenance Monitoring
- RTR — Remote Transmitter/Receiver
- RU — Remote Unit
- RUC — Rapid Update Cycle
- SCC — ATCSCC
- SCS — Sensor Control Subsystem (ADAS)
- SD — Situation Display
- SDP — Service Delivery Point
- SITA — Société Internationale de Télécommunications Aéronautiques
- SMR — Surface Movement Radar
- SOCC — Sector Operations Control Center
- SRR — Short-range Radar
- SRR-mc — SRR multicast
- STARS — Standard Terminal Automation Replacement System
- TACAN — Tactical Air Navigation Equipment
- TC — Tech Center (WJHTC)
- TDLS — Tower Data Link Services
- TDWR — Terminal Doppler Weather Radar
- TFM — Traffic Flow Management
- TFMDG — Traffic Flow Management Data to Government
- TIS-B — Traffic Information Service – Broadcast
- TMA — Traffic Management Advisor
- TNAV — Terminal Navigational Aids
- TVS — Terminal Voice Switch
- TWIP — Terminal Weather Information for Pilots
- VOR — Very High Frequency Omni-Directional Range
- VSCS — Voice Switching and Control System
- WAAS — Wide Area Augmentation System
- WAM — Wide Area Multilateration
- WARP — Weather and Radar Processor
- WME — Wind Measuring Equipment
- WMS — Wide-Area Master Station
- WINS — Weather Information Network Server
- WJHTC — The William J. Hughes Technical Center
- WMSCR — Weather Message Switching Center Replacement
- WRS — Wide-area Reference Station
- WTMD — Wake Turbulence Mitigation for Departure
- Wx — Weather